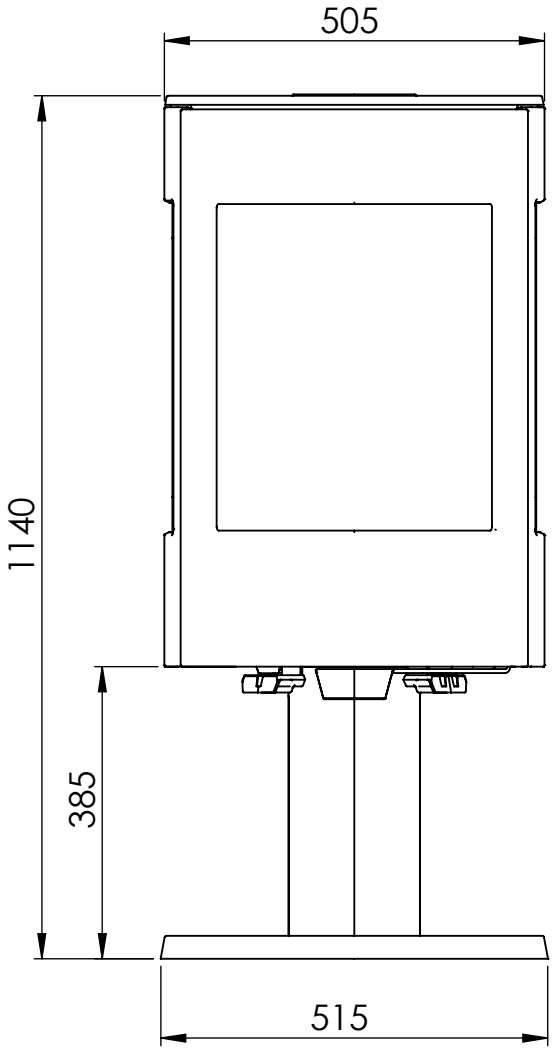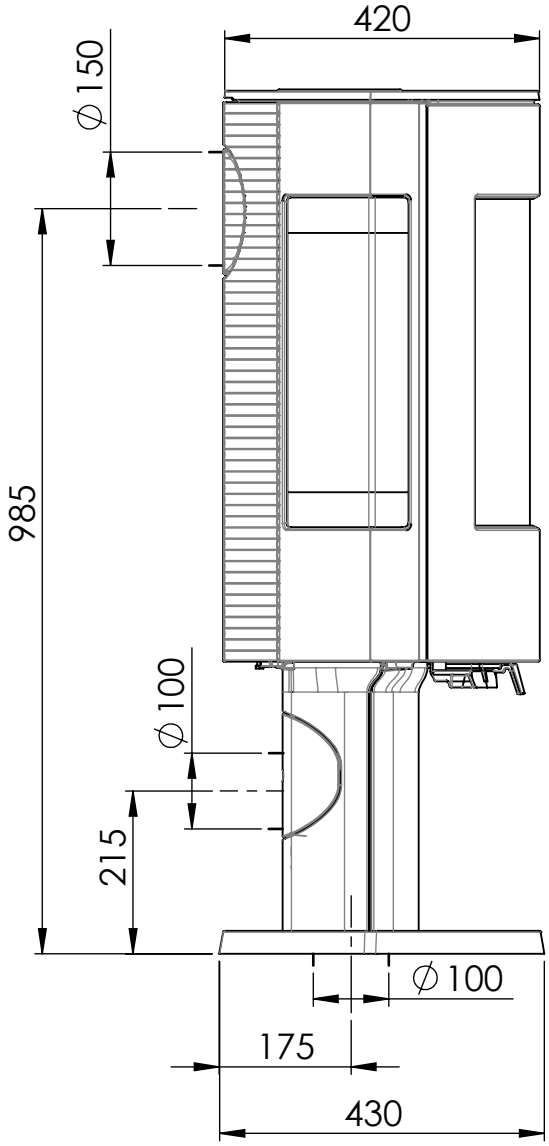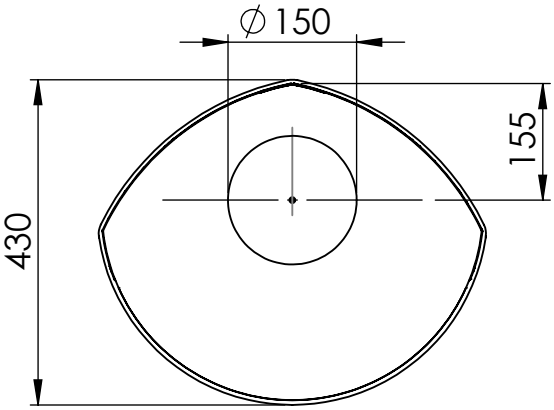ASTRO 3 CB P / MF P